4. GUARDS

4.1. SD-GUARDS

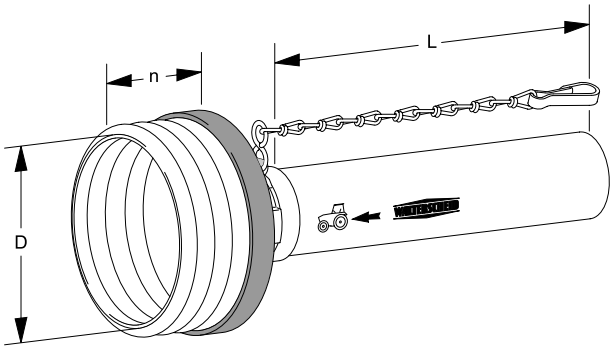

SDH A OUTER GUARD HALVES: SERIES W FOR W DRIVE SHAFTS

Guards	D	n[1)]	L	Drawing No.	Part No.
	[mm]		[mm]		
SDH05	135	6	550	85.005	1368653
SDH05	135	6	1000	85.005	1368641
SDH05	135	6	1500	85.005	1368649
SDH15	158	6	550	85.105	1368682
SDH15	158	6	1000	85.105	1368642
SDH15	158	6	1500	85.105	1368678
SDH25	185	8	550	85.205	1375621
SDH25	160	7	550	85.205	1368514
SDH25	185	8	1000	85.205	1375627
SDH25	160	7	1000	85.205	1368518
SDH25	185	8	1500	85.205	1375633
SDH25	160	7	1500	85.205	1368761
SDH25/1	185	8	1000	85.213	1106239
SDH25/1	160	7	1000	85.213	1378883
SDH25/1	160	7	1500	85.213	1199908
SDH35	185	7	550	85.305	1368784
SDH35	185	7	1000	85.305	1368786
SDH35	185	7	1500	85.305	1368788

[1)] n = number of ribs